ISSN : 2347 - 2243
INDO-AMERICAN JOURNAL OF LIFE
IAJLB
Indo - American Journal of
Life Sciences and Biotechnology
www.iajlb.com
Email : editor@iajlb.com or iajlb.editor@gamil.com

Indo-Am. J. of LifeSc & Bt.,2021- *ISSN 2347-2243 www.iajlb.com*

Indo-American Journal of Life Sciences and Biotechnology

Vol.18, Issue.3, Sep 2021

Performance Of Piston Rod And Collar In Hydraulic Cylinder With Different Shapes And Material Configuration

BhamidipalliNaganavya1,Mrs.Ch.VasanthaLakshmi2

Abstract

There is an ever-increasing demand for increasingly powerful systems to implement theories as the design industry grows more serious. It is possible to move things using hydraulic cylinders, which are mechanical devices. It is imperative that the interior segments of the chamber be able to handle the greater load placed on them in heavier applications where larger yield powers are required, and this is where the design of pressure-driven chamber inward segments comes into its own. Depending on the design, a screw or nut connects the cylinder rod and piston within the chamber. This research focuses primarily on the joints that are subjected to greater tractable or compressive loads during daily activities. During execution action, the chamber responds and reaches an outlandishly empty state. It's possible that a cylinder's joint and chamber will stop working altogether when there isn't any more available stroke, which will result in a large ductile load on the bar and cylinder pole joints. Four compound chamber pole cylinder joints were subjected to a static structural analysis to examine the various workloads these joints can bear and which joint is best suited for modern applications with high malleable loads.

Keywords— High Tensile Load, Stroke and Translatory Motion are some of the characteristics of Hydraulic Cylinder's Cylinder rod-piston joints. Catia, Ansys19.2

1. Introduction

Hydraulic cylinders are powered by pressurized hydraulic fluid, often oil, which provides their source of energy. The water-powered chamber generally consists of a chamber barrel in which a cylinder is connected to a cylinder bar that swings back and forth. The cylinder pole exits the chamber through the chamber head (also referred to as the organ) on the opposite side of the chamber base (also referred to as the top). Seals and sliding rings adorn the cylinder. Partitioning the chamber into two sections by use of a cylinder, one for the base (the top end) and one for the cylinder's pole side (the pole end/head end). Chambers can be mounted using flanges (trunnions), clevises, and hauls. Additional attachment points on the cylinder pole allow the chamber to be attached to the object or machine part that it is pushing or pulling.

For this investigation, the goal is to identify the most unusual malleable burden that goes ahead of the chamber bar junction and requires preload for no joint split by applying different material qualities to

1M.Tech Student (CAD/CAM),Dept. of ME, Pragati Engineering College(Autonomous) ,Surampalemnaganavya.bhamidipalli@gmail.com

2Associate Professor Dept. of ME Pragati Engineering College(Autonomous),chvasantha31@gmail.com

© 2021 BhamidipalliNaganavya, Mrs.Ch.VasanthaLakshmi. This is an open-access article distributed under the terms of the Creative Commons Attribution 4.0 International License (CC BY 4.0), which permits unrestricted use, distribution and reproduction in any medium, provided the original author and source are credited. https://creativecommons.org/licenses/by/4.0/

both the cylinder pole and neckline and analyzing the consequences. Using four different cylinder bar joints and the determined malleable and claim burdens, consolidated chamber bar concepts are examined in order to identify the most appropriate joint that would endure the most cynical scenario of water propelled chamber bottoming-up.

1.1 HydraulicCylinder:

This framework's "engine" is an actuator powered by a pressure-driven chamber. It's the pressure-driven siphon on the "generator" side of the water-powered framework that moves the cylinder by delivering a predetermined or directed oil flow to the pressure-driven chamber. The other chamber's oil is returned to the repository by the cylinder. During the expansion stroke, if we expect oil to enter from the top end and the pole end/head end oil pressure is around zero, the cylinder bar power F approaches the weight P in the chamber multiplied by the cylinder region A. Hydraulic chambers are made up of the following components: (i)Cylinder barrel (cylinder base), (ii)Cylinder head (cylinder), (iii)Piston bar and so on.

1.2 HydraulicCylinderBenefits:

1.3 Water propelled chambers have the amazing advantage of supplying a significant amount of capacity to machines even in remote locations far from a power source. Turbines, diesel motors, and electric engines are all examples of control sources. In addition, these chambers' ability to weigh and estimate proportions is incredibly useful.. Also included are variable speed control, pre-programmed over-burden protection, and positioning advantages. When you need to use a chamber in unusual circumstances, pressure-driven chambers are critical.

1.4 Objectives:

It is at this point that the pressure-driven chamber pole cylinder joint is combined with the greatest preload for no joint division because the most flexible ductile burden from the actualize instrument is at its maximum.Examining the ideas for tensile and pre pressure loads with the use of FEA

Examine four pole and cylinder joints to determine which is the best chamber pole cylinder joint for large-scale applications.

2. ConstructionandPropertiesofMaterials:

2.1 Presumptions

Forstructureandexaminationofcylinderpolejoint snormalstandardwaterpoweredchamberwithfollowingdeterminationsareconsidered,

1. ChamberInternalBoremeasurement–100.08mm;
2. Polemeasurement –49.96mm;
3. FrameworkPressure–1800 psi;
4. Materials–EN 19 composite steel, Magnesium Alloy, Titanium Alloy andothermeasurements aretakenaccordingtotheindustrialrules.

S.No	MaterialProperty	Value	S.No	MaterialProperty	Value
1	Density	1800	1	Density	7850
2	Young'sModulus	4.5E+10	2	Young'sModulus	2E+11
3	Poission'sRatio	0.35	3	Poission'sRatio	0.3
4	BulkModulus	5E+10	4	BulkModulus	1.6667E+11
5	ShearModulus	1.6667E+10	5	ShearModul	7.6923E+10

				us	
6	TensileYieldStrength	1.93E+08	6	TensileYield Strength	2.5E+08

Table2.1.1:MagnesiumAlloy Table2.1.2:Structural Steel

S.No	MaterialProperty	Value
1	Density	4620
2	Young'sModulus	9.6E+10
3	Poission'sRatio	0.36
4	BulkModulus	1.1429E+11
5	ShearModulus	3.5294E+11
6	TensileYieldStrength	9.3E+08

Table2.1.3:TitaniumAlloy

2.2 AnalysisOf LoadsOnCylinderAssembly:

Total tractable load, including vertical load and hydraulic chamber power, was calculated to be 400 kN, with a security factor of 2 [15] based on an analysis of the real instrument.
For M30x3.5x70 bolts and nuts, the fastener demand was 300 kN (for no joint partition, see [11]).

Class 10 nut and 10.9-mm evaluation screw.
2.3AssemblyConceptGeneration:
Case I: Piston and pole assembled with spiral pins, Case II: Piston and pole assembled with strung jolts, Case III: Piston and pole assembled with strung nut, and Case IV: Piston rod and cylinder connected with counter shunk bolts were all considered for the study.
3. Design
Catia:

Fig3.1 RodModel1

There are several different CAD programs, but CATIA, or ComputerAidedThreeDimensionInteractiveApplication, is the most widely used. It is the most widely used CAD/CAM programming in the world for assembling and exhibiting. Formulating, Mean, Designing, and Assembling in CATIA's second complex station of result development. Using CATIA, an item can be designed in the context of the company's actual operations. Thus, programmers were able to make money because of their creativity, which inspired them to use a previously untested yet powerful structure-based standard. A total of four piston rod assemblies were created in CATIA, as illustrated in the following diagram. One cylinder piston rod was utilized for two separate collars.

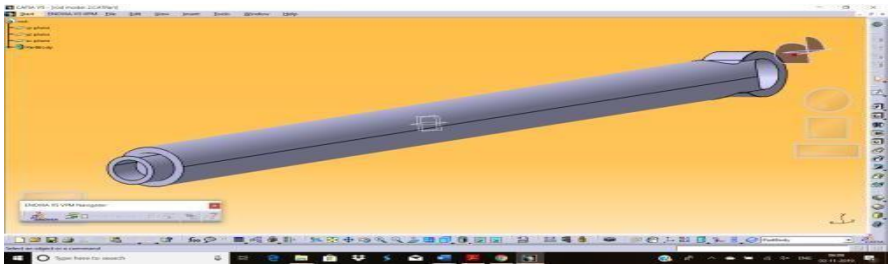

Fig3.2 RodModel 2

Fig3.3Rod Model3

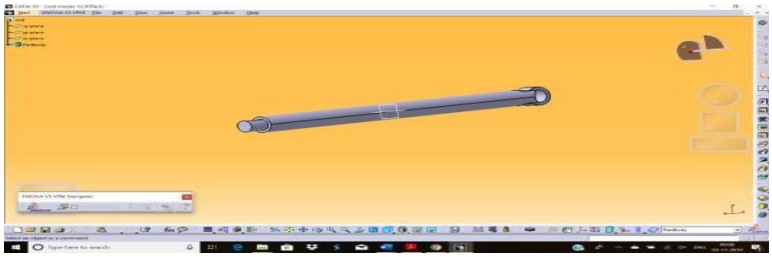

Fig3.4 CollarModel1

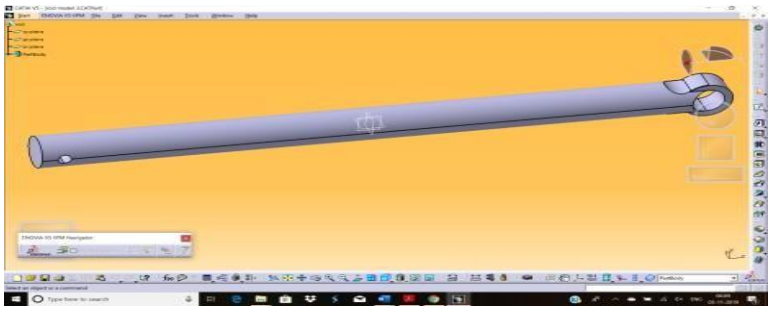

IG3.6COLLAR MODEL3

Fig3.7CollarModel4

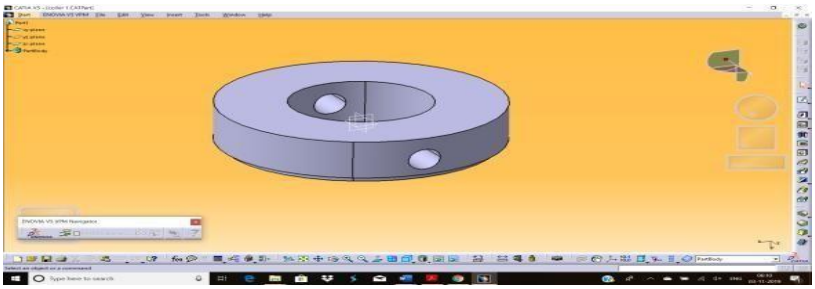

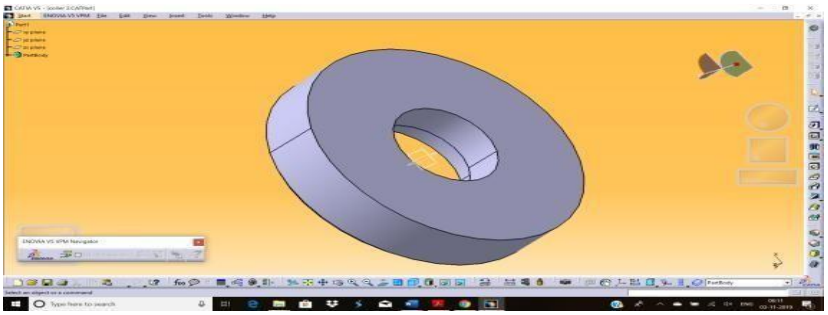

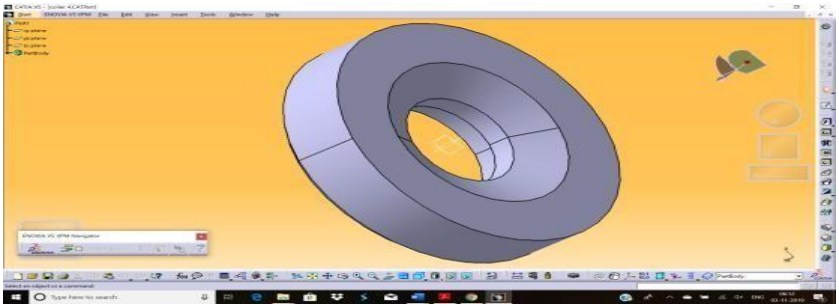

4. Analysis

A wide range of material science controls can be simulated using ANSYS, including vibration, liquid elements, heat transfer and electromagnetic for designers. ANSYS has the ability to input CAD data and then use that data to build a geometry. the wonderful scripting language known as ANSYS ParametricDesign Language (APDL) allows the computerization of routine tasks while also parameterizing your model

Model1WithTotalAssemblyWithStructuralSteel:

Ansys workbench version 19.2 was used in the project to estimate the total deformation, the equivalent stress, and the elastic strain for four examples with three different materials for future investigation.

comparative analysis. In this analysis the four models were meshed and loads were applied according to theobjectives. In that especially the three and four models were shown better results than the other some of theanalysiswere shownbelow.

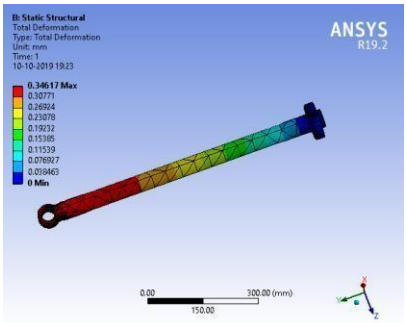

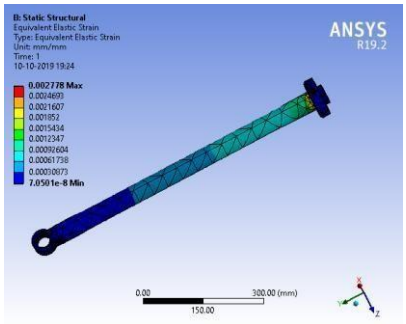

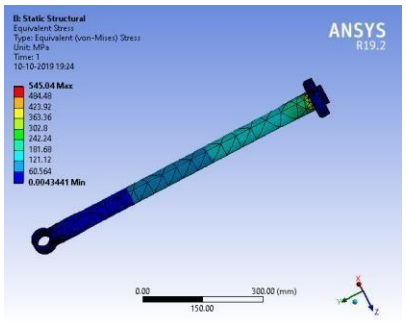

Fig.4.1Total Deformation Fig.4.2EquivalentElasticStrain Fig.4.3EquivalentStress

Model1WithStructuralSteelMaterialWithMagnesiumAlloyCollar:

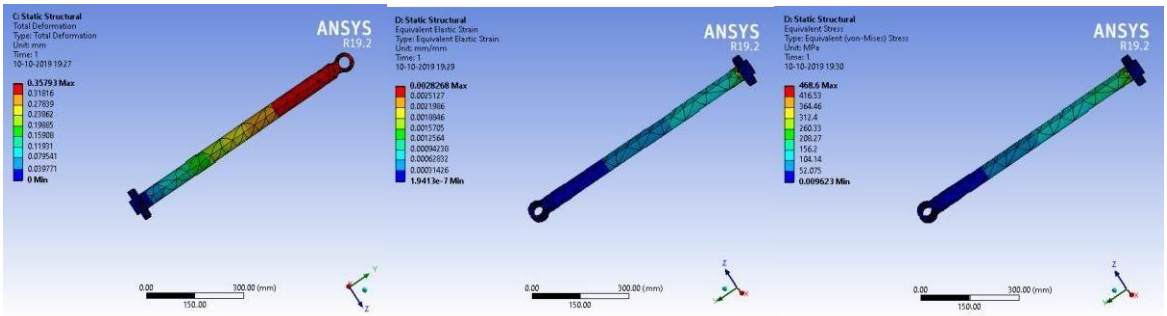

Fig.4.7TotalDeformation Fig.4.8Equivalent ElasticStrain Fig.4.9 Equivalent StressModel 2 With Structural SteelMaterialWithTitaniumAlloyCollar:

Fig.4.10Total Deformation Fig.4.11EquivalentElasticStrain Fig.4.12 Equivalent StressModel 3 WithTotalAssemblyWithStructuralSteel

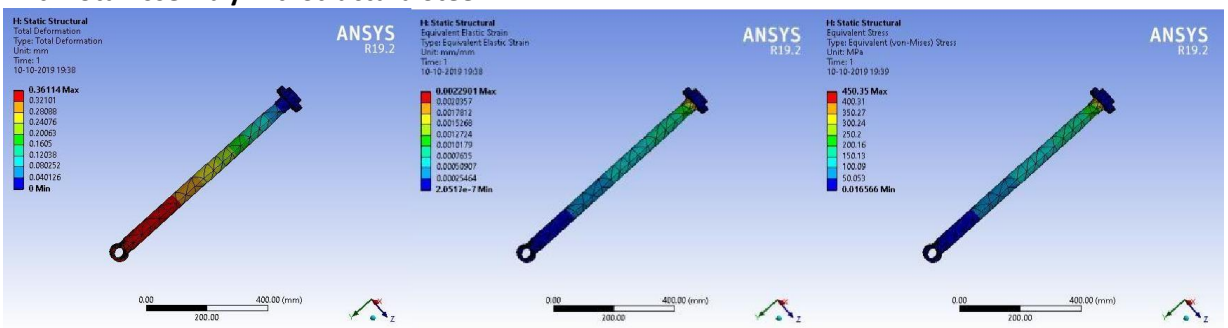

Fig.4.13Total Deformation Fig.4.14Equivalent ElasticStrain Fig.4.15 Equivalent StressModel 3 WithStructuralSteelMaterial WithMagnesiumAlloyCollar:

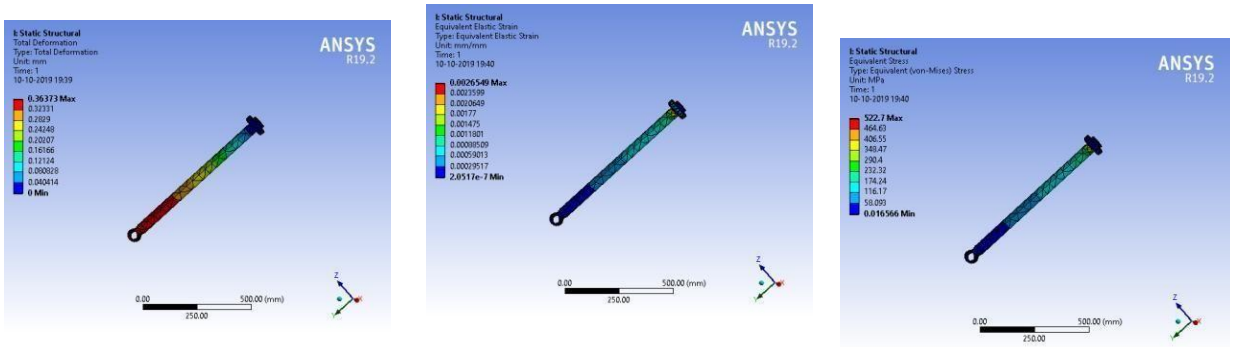

Fig.4.19Total Deformation Fig.4.20EquivalentElasticStrain Fig.4.21 Equivalent StressModel 4 WithTotalAssemblyWith StructuralSteel:

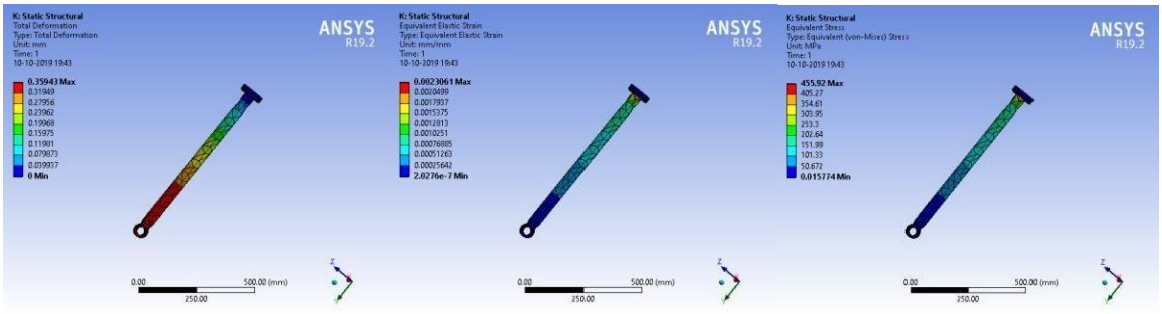

Fig.4.22Total Deformation Fig.4.23Equivalent ElasticStrain Fig.4.24 Equivalent StressModel 4 WithStructuralSteelMaterial WithMagnesiumAlloyCollar:

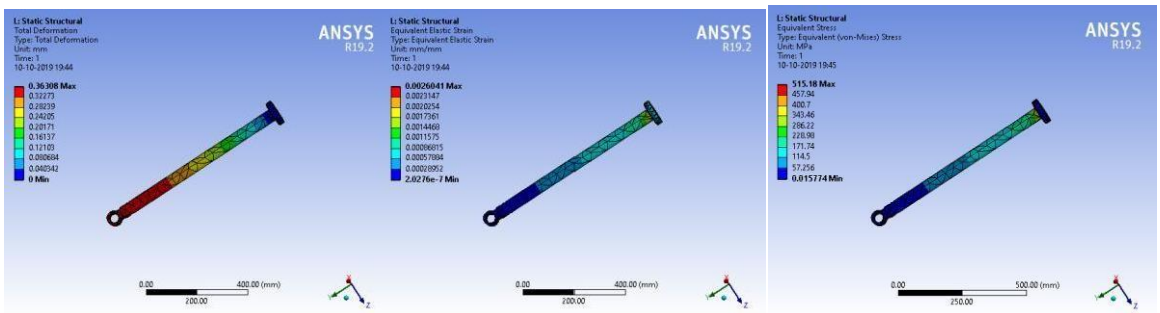

Fig.4.25Total Deformation Fig.4.26EquivalentElasticStrainFig.4.27 Equivalent StressModel 4 With Structural SteelMaterialWithTitaniumAlloyCollar

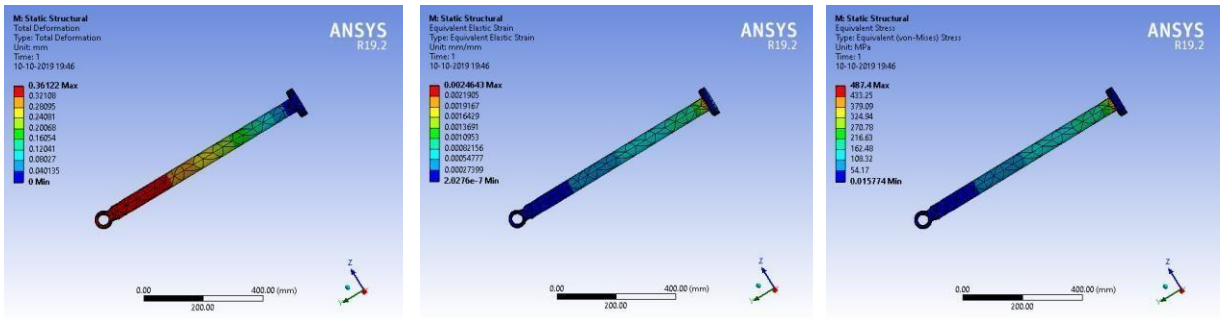

Fig.4.28Total Deformation Fig.4.29EquivalentElasticStrain Fig.4.30EquivalentStress

5. Results:

To compare the total deformation, equivalent elastic strain, and equivalent stress of four models for three distinct materials, the results are provided in the tables below:

Table5.1: Model1:

Model1	totaldeformation		Equivalentelasticstrain		equivalentstress	
	min	max	Min	max	min	max
Totalstructuralsteel	0	0.34617	7.05E-08	0.00277	0.0043	545.04

Stainlesssteel withcollar magnesiumalloy	0	0.35793	1.94E-07	0.004884	0.009623	530.22
Stainlesssteel withcollar Titaniumalloy	0	0.35093	1.94E-07	0.002827	0.009623	468.6

Table5.2: Model2:

Model2	totaldeformation		Equavalentelasticstrain		equavalentstess	
	min	max	Min	max	min	max
Totalstructuralsteel	0	0.42111	2.67E-07	0.003676	0.022294	729.47
Stainlesssteel withcollar magnesiumalloy	0	0.50795	2.67E-07	0.010459	0.022294	468.86
Stainlesssteel withcollar Titaniumalloy	0	0.4485	2.67E-07	0.00587	0.022294	560.57

Table5.3: Model3:

Model3	totaldeformation		Equivalentelasticstrain		equivalentstress	
	min	max	Min	max	min	max
Totalstructuralsteel	0	0.36114	2.05E-07	0.00229	0.016566	450.35
Stainless steel withcollarMagnesiumalloy	0	0.36373	2.05E-07	0.002655	0.016566	522.7
StainlesssteelwithcollarTitaniumalloy	0	0.36235	2.05E-07	0.00247	0.016566	486.03

Table 5.4: Model4

Model4	totaldeformation		Equivalentelasticstrain		equivalentstress	
	min	Max	Min	max	min	max
Totalstructuralsteel	0	0.35943	2.03E-07	0.002306	0.015774	455.92
StainlesssteelwithcollarMagnesiumalloy	0	0.36308	2.03E-07	0.002604	0.015774	515.18
StainlesssteelwithcollarTitaniumalloy	0	0.36122	2.03E-07	0.002464	0.015774	487.4

Below are the graphs of all four models with three materials. In the below we find that we gotlesser values in model 3 and model 4 in the three materials. Especially in the material 3 we gotlessstress values.

5.1 TotalStructuralSteelValues:

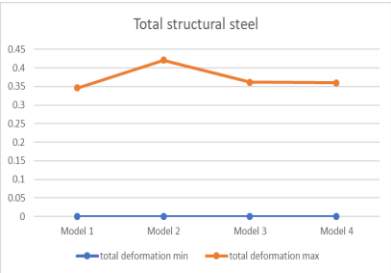

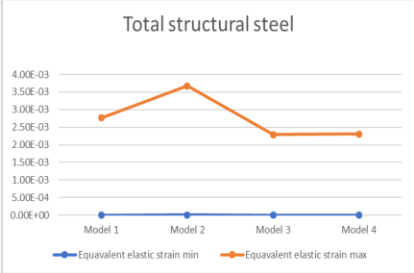

Fig.5.1.1Total Deformation **Fig.5.1.2EquivalentElasticStrain** **Fig.5.1.3Equivalent Stress**

5.2 Structural Steel WithCollarMagnesiumAlloyValues:

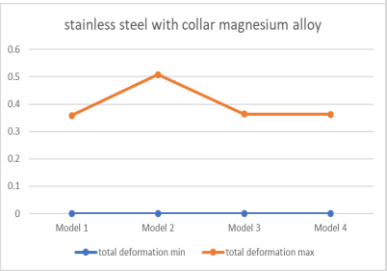

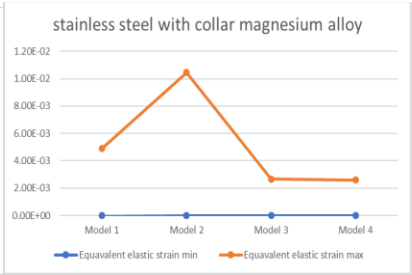

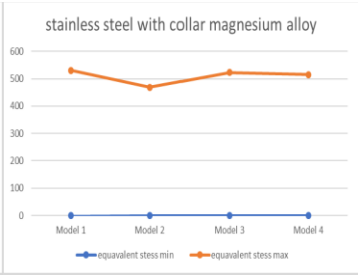

Fig.5.2.1Total Deformation **Fig.5.2.2EquivalentElasticStrain** **Fig.5.2.3EquivalentStress**

5.3 StructuralSteelWithCollarTitaniumAlloyValues

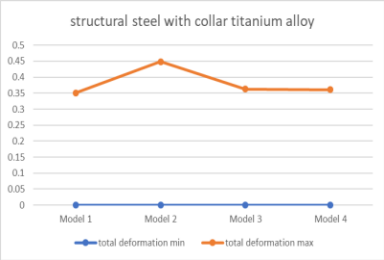

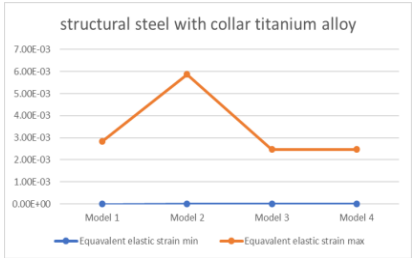

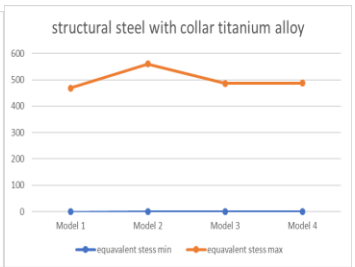

Fig.5.3.1Total Deformation **Fig.5.3.2EquivalentElasticStrain** **Fig.5.3.3EquivalentStress**

6. Conclusions

Dissecting deformation, strain, and stress in four different water-powered cylinder assemblies is the focus of this postulation. CAD/CAM tools were used to complete this project in its entirety. In order to maximize the use of auxiliary conduct, three different materials are used in the reproduction. Observations made during the course of investigation are listed below.

First and foremost, the pressure and stresses in model 3 and model 4 are considerably reduced, with a minimum stress of 450.35 in model 3 and 455.92 in model 4, respectively.

There will be no significant reduction in tension or strain by changing the material of the neckline and clasp, but it is wise.

The pole's distortion is the primary cause of the above-mentioned behavior, and it is occurring in no other region of the body.

With the use of different materials, the difference between model 3 and model 4 is smaller and more erratic.

For a more comfortable working environment, additional reinforcement of the bar is required.

7.References

[1] "A failure analysis research on the shattered connecting bolts of a filter press," by Sh. Molaei, R. Alizadeh, M. Attarian, and Y. Jaferian, published in Elsevier Journal, issue 4, pp. 26-38, October 2015.

[] "Fatigue Optimization of a Heavy-duty Hydraulic Cylinder" by G. Nicoletto and T. Marin. Vol. 18, No. 3, April 2011, pp. 1030-1036

(Elsevier Journal).Saman Fernando, Dr. Saman Fernando, "Mechanisms and prevention of bolted joint vibration loosening", Australian Journal of Mechanical Engineering, Volume 2, Issue 2 (September 15, 2015).
"A Method for Calculating Torque Specifications for Bolted Joints with Prevailing Torque," by John D. Reiff, was published by the American Society of Mechanical Engineers.-Journalof ASTMInternational,March2005, vol.2,issueno.3.