ISSN : 2347 - 2243

Indo - American Journal of Life Sciences and Biotechnology

www.iajlb.com
Email : editor@iajlb.com or iajlb.editor@gamil.com

ISSN 2347-2243 www.iajlb.com

Indo-Am. J. of LifeSc & Bt.,2022- Vol.19, Issue.3, July 2022

Indo-American Journal of Life Sciences and Biotechnology

Performance Evaluation of Switched Reluctance Motor Drive Control for Electrical Vehicles Driven by Solar PV Systems

1Alishare Shahanaz Anjum, 2R. Yedukondalu

Abstract

As a viable means of decreasing greenhouse gas emissions, electric vehicles (EVs) have risen to the top of the list of research priorities. One of the most promising electric vehicle (EV) motors is SRMs (switched reluctance motors). Electric vehicles can go greater distances thanks to the usage of photovoltaic (PV) panels on the vehicle. Phase winding properties of SRMs have been taken into account in this paper's design of a tri-port converter. In addition to four driving modes and two charging modes, the vehicle has six functioning modes. In the driving mode, the energy decoupling control for full power point monitoring (MPPT) of the PV panel and the SRM speed control is accomplished. Standing charge modes allow a grid-connected charging topology to be created without the use of additional gear. When the PV panel is charging the battery directly, a multi-section charging control approach is used to optimise energy usage. Tests and simulation results based on Matlab/Simulink demonstrate the suggested tri-port converter's efficiency, which might have economic implications for increasing EV market acceptance.

Keywords: PV, SRM, MPPT, Electric Vehicle

1. Introduction

Motor drives, power converters, batteries, and energy management frameworks have propelled electric vehicles (EVs) to new heights [1–4]. Because of current battery advances, driving distances are often small [5–7]. This restricts the widespread usage of EVs. When it comes to motor drives, PM machines (premium permanent magnets) are most often used, but the large quantities of unusual earth minerals needed make EVs less widely available [8], [9]. To address these challenges, a photovoltaic (PV) board and an exchanged Switched reluctance motor (SRM) are used to provide power supply and motor driving, respectively. To begin with, a controllable energy supply is achieved by placing the PV board at

1PG Scholar, 2Associate Professor

1,2Department of EEE, Dr.Samuel George Institute of Engineering and Technology, Markapur, Prakasam, AP, India.

1E-mail: anjumshahanaz31@gmail.com, 2E-mail: santoshpaul717@gmail.com

© 2022 Alishare Shahanaz Anjum, R. Yedukondalu. This is an open-access article distributed under the terms of the Creative Commons Attribution 4.0 International License (CC BY 4.0), which permits unrestricted use, distribution and reproduction in any medium, provided the original author and source are credited. https://creativecommons.org/licenses/by/4.0/

the half and half electric vehicle (HEV), but the ICE is replaced by the PV board. Figure 1 depicts the PV-powered electric vehicle architecture. Off-board charging stations, a PV, batteries, and power converters are some of its most important components. It is possible to reduce energy exchange forms by upgrading the motor to integrate certain locally accessible charging capabilities. As an example, an article in the IEEE Transactions on Power Electronics describes a 20-kW split-stage PM motor for charging electric vehicles, however it suffers with high consonant material at the rear electromotive constrain (EMF). A typical SRM is required for a different configuration. A 2.3-kW SRM may be charged and rectified using a machine that is locally available.

windings as the inductor for the information channel. It is suggested that the driving topology have a measurable structure. Driving and grid-charging are accomplished using a four-stage half bridge converter in light of the to aid in the flexible management of energy flow. intelligent power modules (IPMs). even if large-scale manufacturing and the use of half/full extension topology reduce the unchanging quality of mass production modularization (e.g., shoot-through issues). For module HEV, Paper [10] provides a simple architecture based on an adaptive energy stream. However, for grid-charging, the grid must be linked to the generator rectifier, which builds the energy transformation process and reduces the charging efficiency of the grid itself. However, there has yet to be developed a convincing architecture and control mechanism for PV-bolstered EVs. PV-encouraged EVs have unique features that set them apart from conventional ICEs, such as a maximum power point tracking (MPPT) system and a focus on solar energy. This study proposes a low-effort tri-port converter to arrange the PV board, SRM, and battery with the particular purpose of achieving ease and adaptability in energy stream modes. Six modes of operation have been developed

Figure 1. PV-fed HEV.

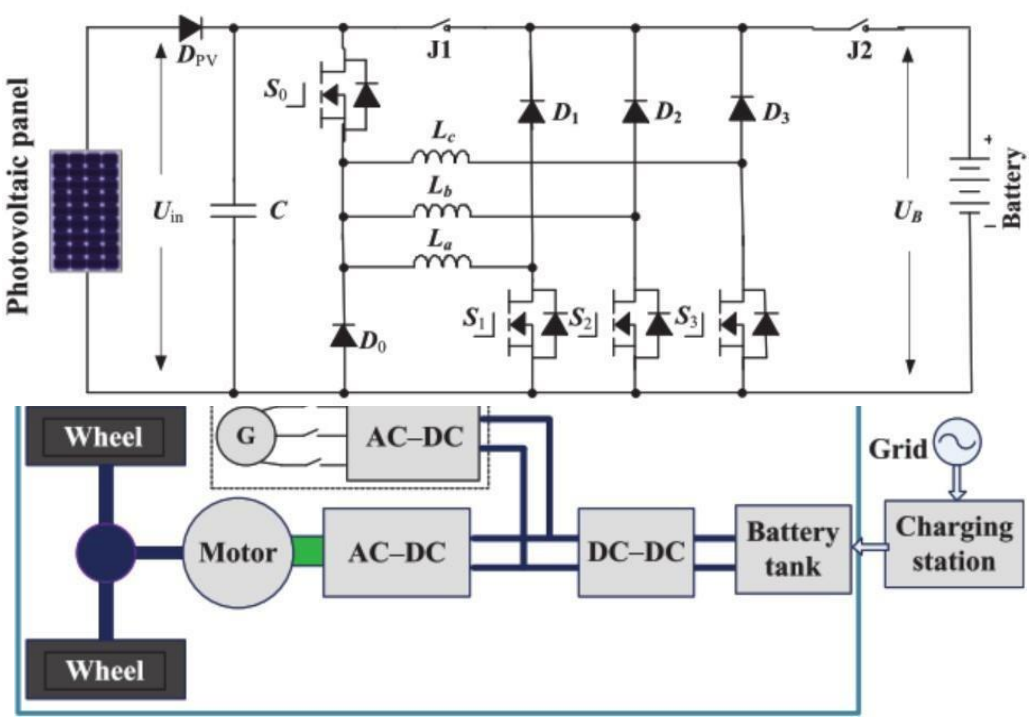

Figure 2. Proposed tri-port topology for PV-powered SRM drive.

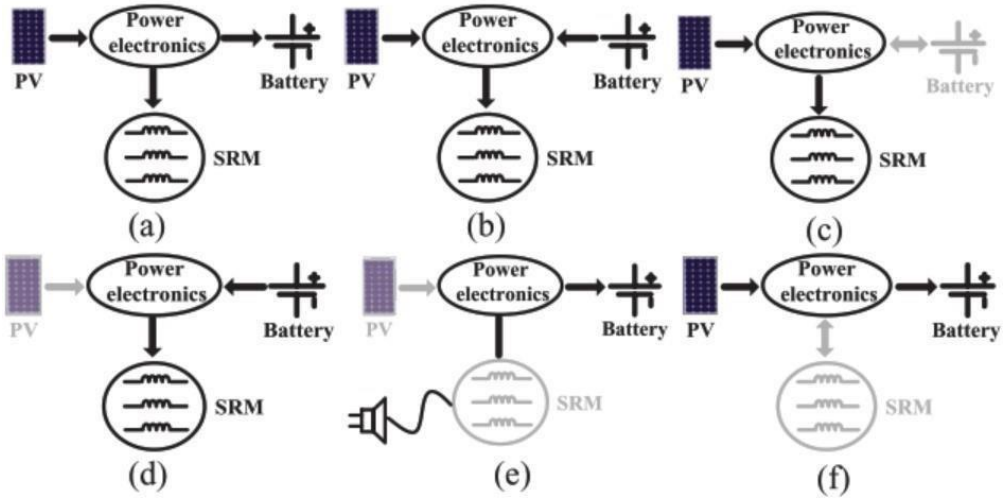

Figure 3. Six operation modes of the proposed tri-port topology. (a) Mode 1. (b) Mode 2. (c) Mode 3. (d) Mode 4. (e) Mode 5. (f) Mode 6.

2. **Electric Vehicle**

One or more electric motors provide propulsion in an electric car (EV), which is also known as an electric drive vehicle. Electrically propelled vehicles (EVs) comprise anything from electric automobiles to electric trains to electric trucks to electric aeroplanes. During the mid-19th century, when electricity was one of the most popular sources of motor vehicle propulsion, electric vehicles were born. They provided a degree of comfort and convenience of operation that gasoline automobiles couldn't match. Motor vehicles are mostly propelled by internal combustion engines (ICEs), although electric power is still widely used in other vehicle types, such as trains and microcars of various sizes.

There has been a revived interest in electric transportation infrastructure as a result of rising environmental concerns and predictions of peak oil in recent decades. To put it another way, the electricity used to power electric cars comes from a variety of sources, from fossil fuels to nuclear power to renewable energy sources like tidal energy and wind power. Transmission to the vehicle may be accomplished by using overhead power lines, wireless energy transmission, such as inductive charging, or a direct connection via an electrical cable, depending on how the energy is produced. A battery, flywheel, or super capacitors may then be used to store the power on board the vehicle. Combustion-based vehicles can often only get their energy from a single or limited number of sources, most commonly nonrenewable fossil fuels. In electric or hybrid cars, the capacity to recover energy ordinarily lost during braking and store it in the vehicle's battery as electricity is a significant benefit.

It was in 2003 that Toyota released the first mass-produced hybrid gasoline-electric vehicle, the Prius, while the Nissan Leaf, the first battery electric car made by a major automaker, will debut in December 2010. Major automakers are developing electric vehicles and the United States and other countries are developing experimental charging networks for them.

Vehicle Types

- Hybrid electric vehicle

3. To create a hybrid electric car, an internal combustion engine is coupled with an electric motor. The Toyota Prius, a hybrid electric vehicle, is one such example.

4. Off-road and on-road electric vehicles

5. Many different types of electric vehicles are on the road today, serving a wide range of functions. These include automobiles, trolleybuses, scooters, bikes, motorbikes, and even golf carts. Off-road vehicles include things like electric tractors and all-terrain vehicles.

6. automobiles powered by electricity that run on rails

7. Electric pantograph-powered streetcars or tram systems. Because of the railway line's fixed nature, it is far simpler to employ electrified third rails or permanent overhead wires than it is to use heavy onboard batteries. All over the world, electric locomotives, trams, streetcars, light rail systems, and rapid transit systems are in use. Electric trains offer the best of both worlds when it comes to power-to-weight ratios since they don't have to carry a large internal combustion engine or batteries. High-speed trains like the French double-decker TGV can reach 320 km/h (200 mph) or more when powered by electricity.

8. Additional advantages include increased short-term surge power for rapid acceleration and the ability to restore braking power to the grid rather than squander it.

9. Maximum Power Point Tracking

PV modules are managed by MPPT (Maximum Electricity Point Tracking), an electrical system that seeks to maximise the amount of electricity they can produce. MPPT is not a mechanical tracking system that "physically moves" the modules in order to position them toward the sun, to put it another way. MPPT employs a completely electronic method to change the modules' electrical operating points in order to maximise the modules' output. As more power is used from modules, the charge current for batteries increases. Using MPPT in conjunction with a mechanical tracking system is an option, although the two approaches are quite different from one another. During what conditions may a PV array produce the most power? That's what MPPT techniques are designed to solve. This section presents MPPT procedures in any order. Voltage in a Fractional Open Circuit Voltage open-circuit is derived by dividing the array voltage at maximum power (VMPP) by the VOC/VOC ratio. This factor k1 has been calculated to be between 0.71% and 0.88%. After the constant k1 has been found, VMPP may be estimated by doing frequent VOC monitoring. The tracking effectiveness of this approach, despite its simplicity of implementation and cheap cost, is hampered by the use of incorrect constant k1 values in the VMPP computation. Current in a Fractional Short Circuit An array's maximum power point may be calculated using this method since IMPP and ISC are virtually linearly related in nature.

(2)

In contrast to the fractional voltage method, where k2 is a constant, here it is not. There has been a range of estimates from 0.78 to 0.92. Accuracy and tracking efficiency are dependent on short circuit current measurements. Disturb and Take Notes Sampling current and voltage from solar panels is used to assess how much power is generated and how much power is changed. The tracker alters the voltage of the solar array on a regular basis. In response to a certain disturbance, PV output power rises (decreases) and more perturbations are generated in the same (opposite) direction. The duty cycle of the dc chopper is adjusted and the procedure is repeated in order to get maximum power. The MPP serves as the system's fulcrum. Lessen the magnitude of the perturbation step to reduce the oscillation. The MPPT is greatly slowed down by the small step size used. The answer to this problem is a smaller disturbance disruption. In contrast, the P&O technique is vulnerable to failure in rapidly changing environments. A number of research projects have led to significant advancements in traditional Hill-climbing and P&O approaches. The perturbation sign is found by comparing the actual power point to the two prior points using a three-point weight comparison P&O

technique. An initial two-stage tracking approach is introduced by Reference, which is both speedier and sharper. tracking.

Incremental Conductance

The method is based on the principle that the slope of the PV array power curve is zero at the maximum power point.

$$\Delta I/\Delta V < -I/V \text{, right of MPP}$$

Comparing I/V to the incremental conductance (I/V - I/V) is a simple way to monitor the MPP

Until equation (4) is met, the algorithm increases or decreases the array reference voltage. At this moment, the PV array continues to operate at full capacity. High sample rates and quick power slope

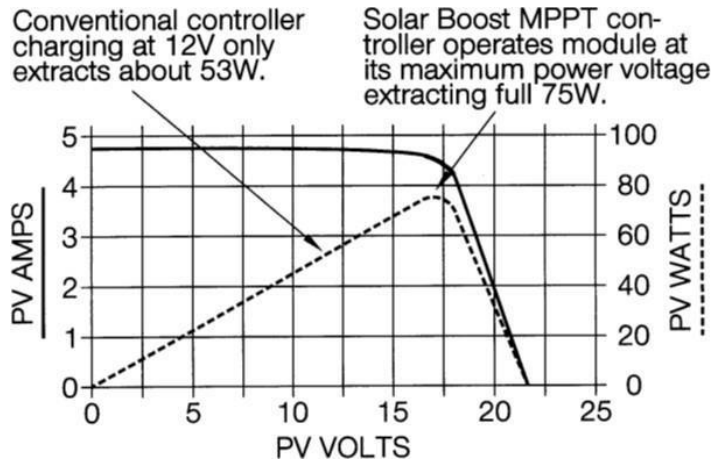

computations are required for this strategy.

Figure. 4 **PV characteristics**

10. Photovoltaic Inverter

11. Because of its design and the Semiconductor materials utilised, a single cell cannot supply adequate power for most applications. To generate enough power, many cells must be joined together. When connecting cells in a series or parallel, the top contact of one cell is linked to the rear contact of the next cell in the chain. No matter how many cells are in the group, there are only two points of interaction.

interconnectedness of the series

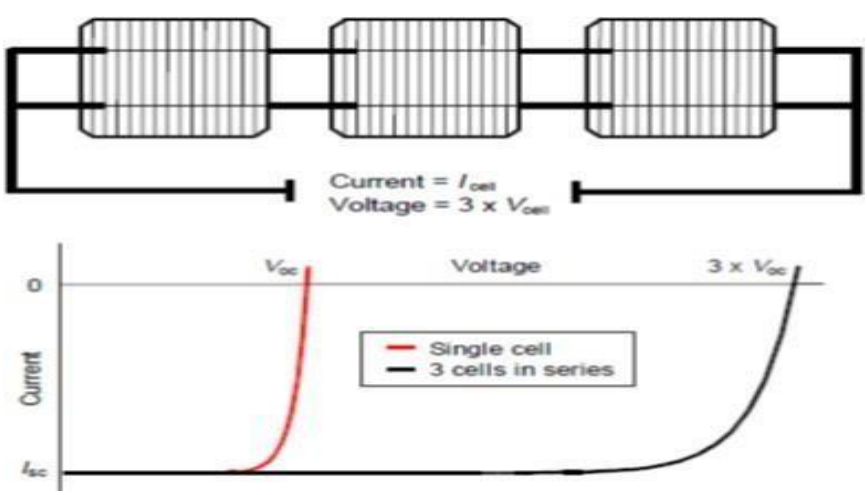

There are examples of series connections displayed in Figure 5; this string-like collection of connected cells is what the term refers to. Each cell's voltage may be multiplied by the string's current output to provide a larger voltage output than a single cell can produce on its own. In this case, the output voltage is 3Vcell).

Figure 5. Series connection of cells, with resulting current–voltage characteristic.

A series string must be appropriately matched, particularly with respect to the current of each cell. If one cell provides much less current than the other cells, the string will operate at a reduced current level, and the other cells will not be operating at their full potential.

Briefly stated:
Figure 6 depicts the connections between three cells in parallel. Each cell's current (in this instance, 3 Icell) is added together to provide the same voltage as a single cell (in this case, 3 Vcell). Because all cells must work at the same operating voltage, voltage matching is just as important as it is with previous generations of batteries. This means that if one cell's open circuit voltage is much greater than the other, all of the cells will be forced to operate below their maximum power point. The better cells will be compelled to operate at voltages lower than their maximum power points in order to maintain their performance. The optimal output power will always be lower than the actual output power.

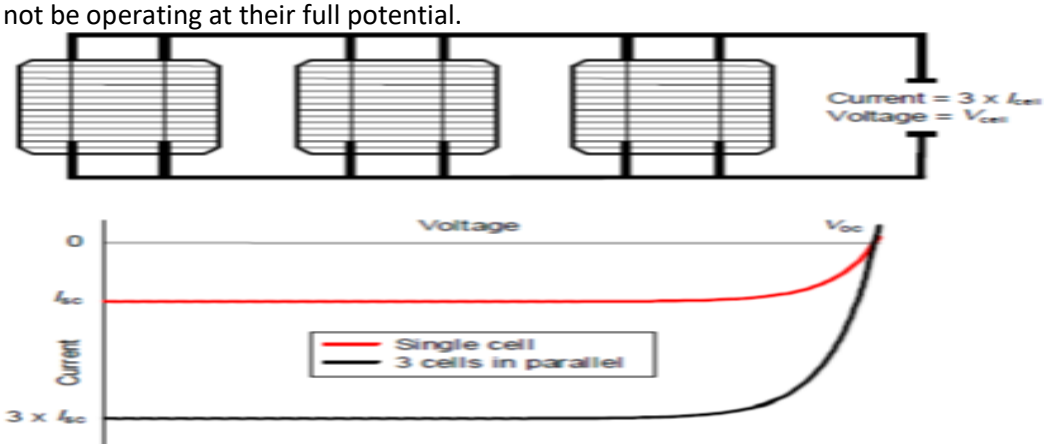

Figure 6. Parallel connection of cells, with resulting current–voltage characteristic.

17. Proposed System Design

Systems may be set up in two ways: standalone or grid-connected. The stand-alone PV system, as its name indicates, is able to deliver energy to a single or a few specific loads. In order to generate power throughout the night or during periods of low sunshine, it may incorporate a storage facility (e.g., a battery bank). As a stand-alone system does not rely on any external power source, it is sometimes referred to as an autonomous system. Instead, grid-connected solar power systems work in tandem with the existing electrical infrastructure. To input energy into the grid distribution system or to power loads that can also be supplied from the grid, this device may be utilised.

A diesel engine or a wind turbine may be added to the system to help satisfy the system's power needs in certain cases. As a result, these systems are known as "hybrid" systems. As long as the power sources are complimentary, hybrid systems may reduce storage requirements without sacrificing load probability. They can be employed in both stand-alone and grid-connected applications.

The schematic schematics of the three primary system types are shown in Figures 7, 8, and 9.

Figure. 7 Schematic diagram of a stand-alone photovoltaic system.

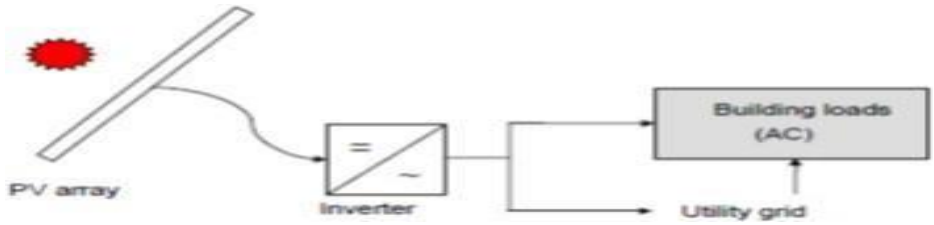

Figure 8. Schematic diagram of grid-connected photovoltaic system.

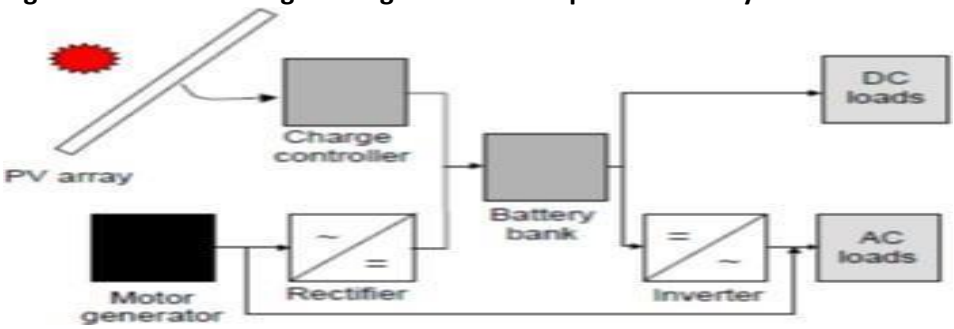

Figure 9. Schematic diagram of hybrid system incorporating a photovoltaic array and a motor generator (e.g., diesel or wind).

Switched Reluctance Motor

Power electronics and computer-aided electromagnetic design have made it possible to fulfil the

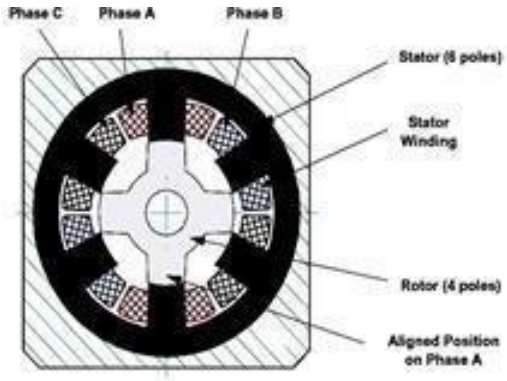

full potential of the switching reluctance motor that was first proposed in 1838. Lawrenson and his

colleagues researched variable reluctance motors (SRMs) that are electrically commutated AC chines (1980). Instead of the customary pricey permanent magnets, they are more than just a high-speed stepper motor. An induction motor drive is combined with an AC brushless commutator motor drive, as well as a DC commutator motor drive, to provide a unique set of benefits. When compared to synchronous motors and induction motors, the

SRM is more durable, simpler to produce, and more cost effective. High peak torque-to-inertia ratios and rotor mechanical design make them ideal for high-speed applications.

Figure. 10 Constructional diagram of Three-Phase SRM

Additional advantages include unipolar driving of the reluctance motor, which reduces the number of switching devices required in the converter. Drive systems may be more efficient and cost-effective because of these factors. It's easy to make, has a long shelf life, and can still work even if any of its components fail. No shoot-through issues are possible because of its power converter Because of its basic mechanical design, SRMs have promise as low-cost electromechanical energy conversion devices. A switch reluctance motor has a number of benefits, including low manufacture costs and high efficiency. Due to the foregoing benefits and the fact that SRM is becoming a rival to induction and DC machines, this study attempts to design a better control scheme for SRM.. for SRM.. After reducing the high torque ripple disadvantage, this motor may be successfully introduced into the market for everyday use.. Because the rotor and stator are aligned in this chapter's control schemes, this chapter provides a detailed understanding of SRM, which is necessary to comprehend how the control schemes are put together.

Its inductance profile is triangular, with greatest inductance when aligned and lowest inductance

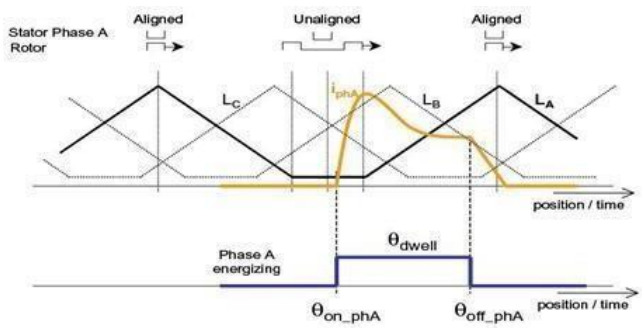

when not aligned, as can be seen in the diagram below. SRM phase A is shown in Figure 10 as an imagined triangle inductance profile of all three phases of an SRM When compared to the other phases, A, B, and C each have an electrical shift of 120. The dwell angle (dwell) refers to the period of time during which a phase is powered. on' and off' are the angles at which the device is turned on and off, respectively.

Figure.11 Phase Energizing

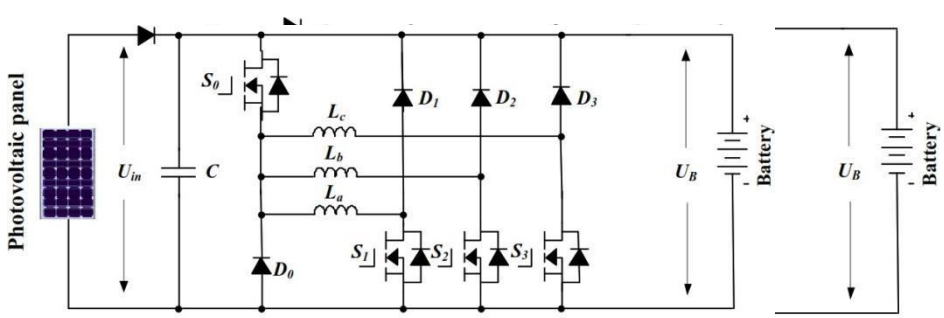

(b) Operation circuit under mode 2

Figure 12 depicts the topology and working modes that have been proposed so far. The PV, battery, and SRM energy terminals are all included in the tri-port architecture. In Figure 12, you can see how a power converter made up of four switching devices, four diodes, and two relays is used to connect them all together. The six modes of operation indicated in Fig. 3 are supported by regulating the relays J1 and J2; the relevant relay actions are listed in Table I. SRM and battery are powered by PV in mode 1 of operation. In mode 2, the SRM is powered by both the PV and the battery. PV power is used only in mode 3, with no battery backup. In mode 4, the battery powers the vehicle, and the solar panel is unused. ' While the PV and SRM are turned off, the battery is recharged using a single-phase grid in mode 5. PV powers the battery while SRM is idling in mode 6.

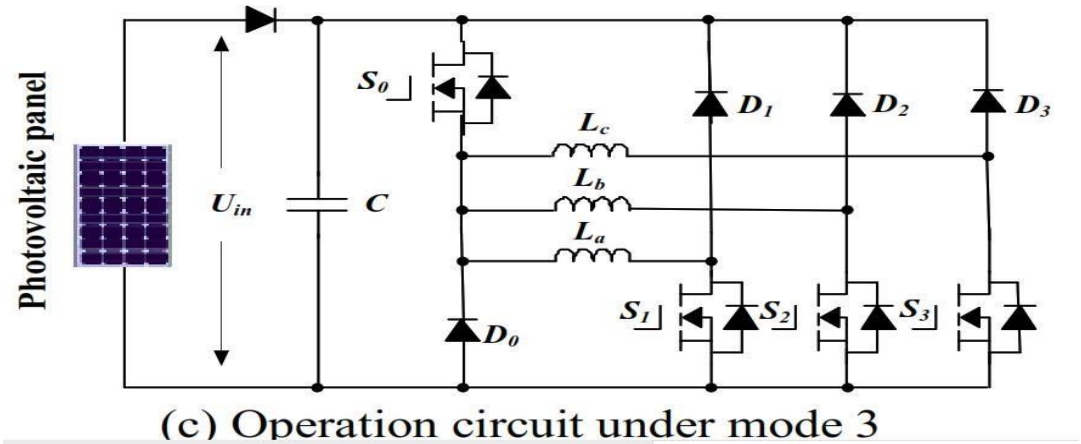

(c) Operation circuit under mode 3

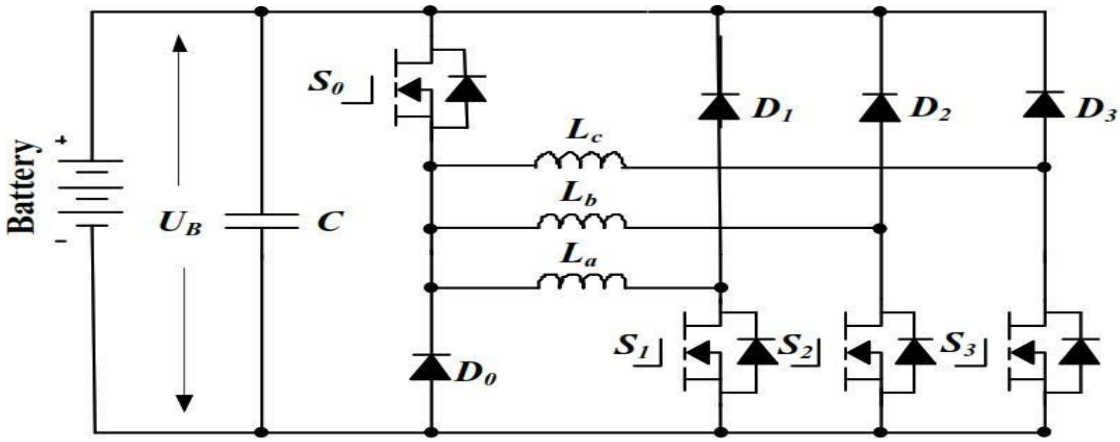

(d) Operation circuit under mode 4

Figure.12 The equivalent circuits under driving modes.

Control Strategy under Different Modes

In order to make the best use of solar energy for driving the EV, a control strategy under different

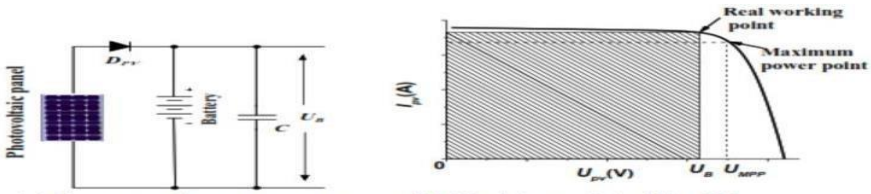

(a) Compound power source (b) Working point of the PV

ıtissue.php

modes is designed.

Figure. 13 Power supply at mode 2.

In a single-source driving mode There are PV-driving, battery-driving, and PV and battery parallel feeding sources depending on the kind of power source. Mode 2 may be used to provide adequate energy and make full use of solar energy when PV power cannot sustain the EV under high load conditions. On the other hand, Figure 14 depicts the PV panel operating points that are equal to those shown in Figure 13, the equivalent power source.

Paralleling the battery with the PV panel causes the PV panel voltage to be clamped to the UB

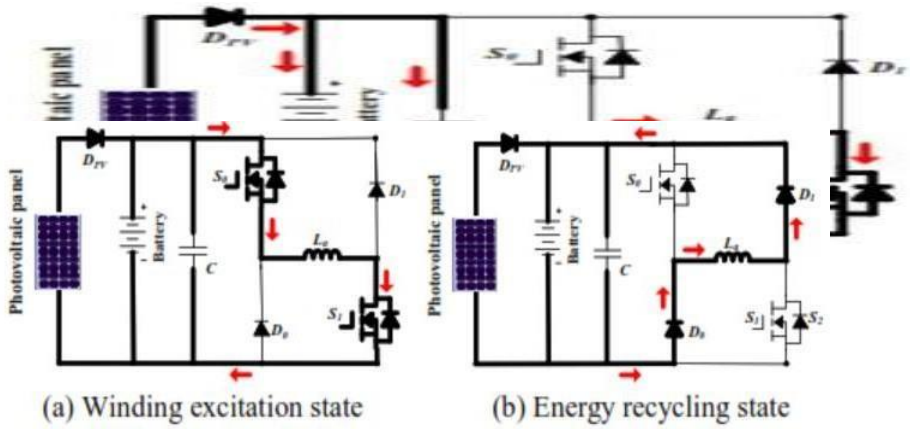

voltage of the battery. Energy recycling and excitation of windings are the two modes of operation in mode 2.freewheeling states, as shown in Figure 14. Modes 3 and 4 have

similar working states to mode 2. The difference is that the PV is the only source in mode 3 while the battery is the only source in mode 4.

Figure. 14 Working states at mode 2

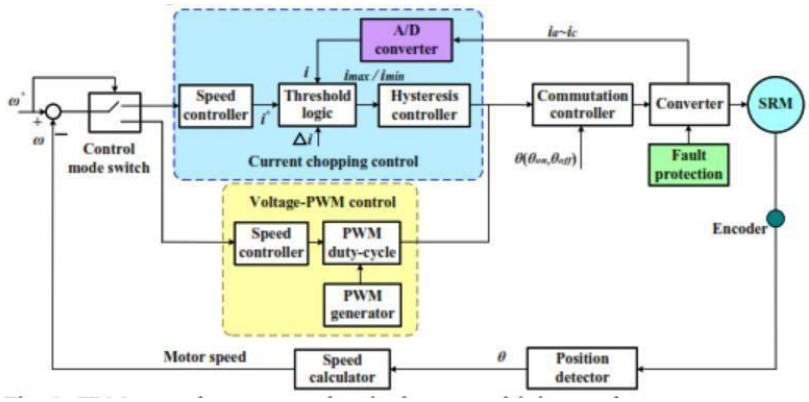

Figure. 15 SRM control strategy under single-source driving mode

Control strategy A for driving-charging hybrids The freewheeling current is used to charge the battery in the driving-charging hybrid control mode, as shown in drive mode 1. Both the PV panel's MPPT and the SRM's speed may be controlled. The PV-driving mode is converted to a dual-source mode. Mode 3 begins by setting a certain speed for the motor to run at. Afterwards, J2 is activated and J1 is deactivated, enabling mode 1. The maximum power of a PV panel may be monitored by adjusting the turn-off angle. The dual-source mode has three

stable operating states (mode 1). In the drive charging mode, Fig. 16 shows the control method. It is seen in Figure 16 that the SRM turns on at a certain ang le, and it turns off at the same angle. It is possible to alter the SRM's speed by modifying the turn-on angle, and it is also possible to alter the PV panel's MPPT by adjusting the turn-off angle.

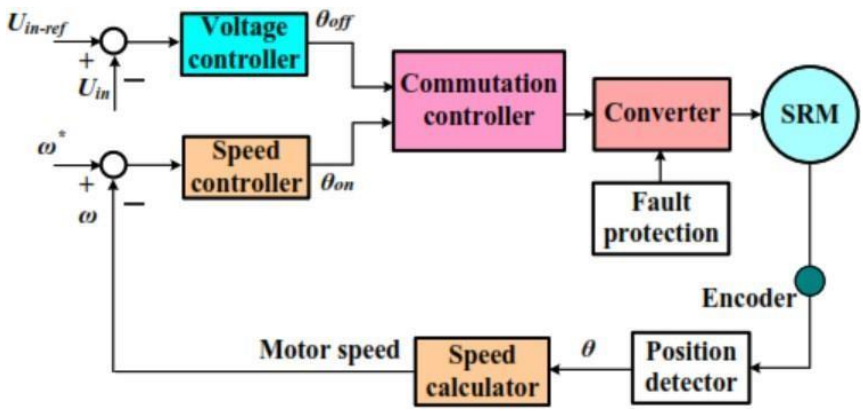

Figure. 16 Control strategy under driving-charging mode (mode 1).

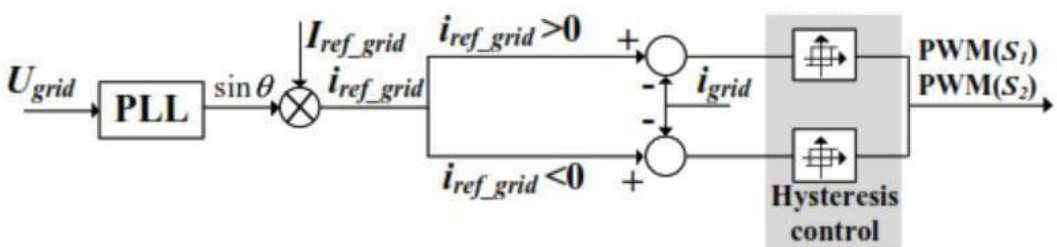

In order to control the charging of the grid The single-phase grid charging is also supported by the suggested topology. Chargers operate in one of four basic modes, with S0 being the default. There are two operational states when the grid's instantaneous voltage exceeds zero. A comparable equation can be found in Figure 17 for the conductivity of S1 and S2 when the grid voltage is applied to the phase winding La2.

Figure. 17 Grid-connected charging control.

Figure. 18 Charging control strategy.

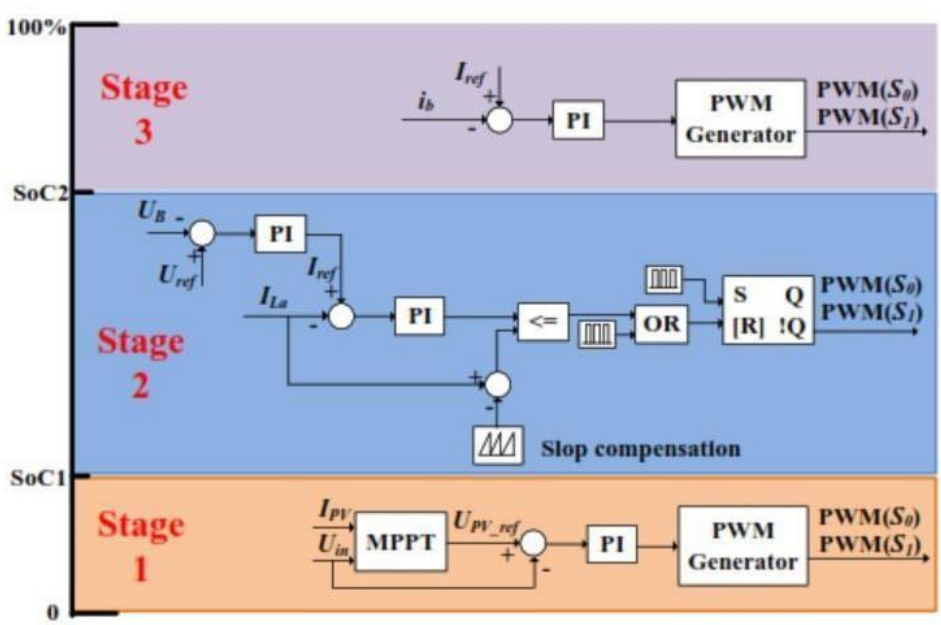

ntissue.php

18. Simulation Results

The SRM is first modeled in MATLAB/Simulink using parameters in Table.

TABLE I
SIMULATION PARAMETERS

Parameter	Value
SRM	12/8
PV panel Maximum power point voltage reference voltage	310 V
Battery voltage	350 V
Constant voltage control reference voltage	355 V
Constant current control reference current	1 A
Mode 1, charging current	60 A
Mode 4, driving speed	1250 r/min
Mode 6, constant voltage charging reference	355 V
Mode 6, constant current charging reference	1 A

Figure. 19 Simulation results of driving-charging mode (mode

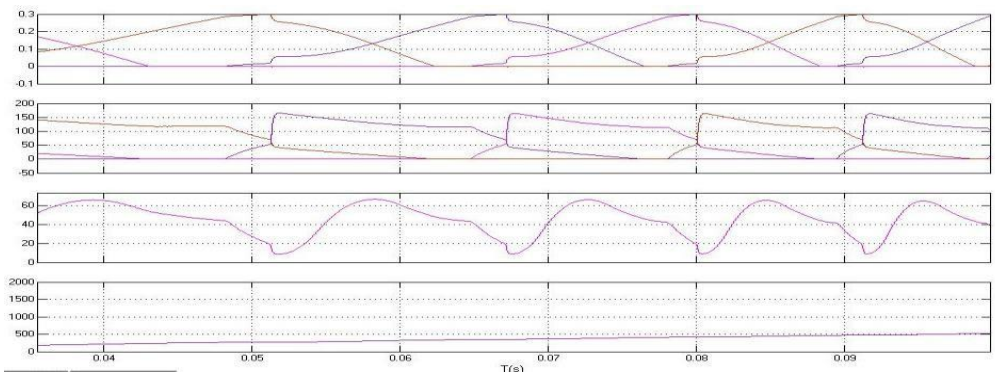

Figure. 20 Simulation results of the single source driving modes (modes 2–4).

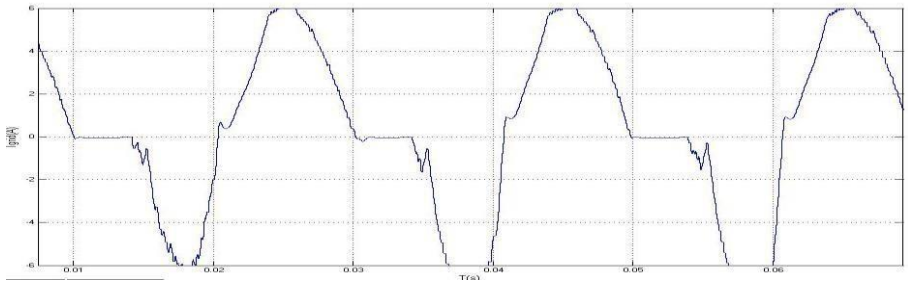

Figure. 21 Simulation results of grid charging (mode 5)

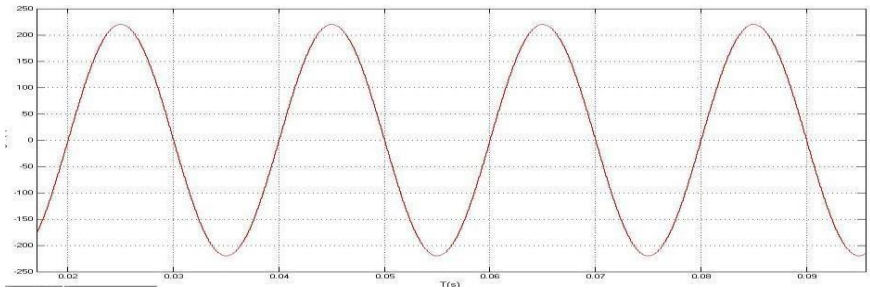

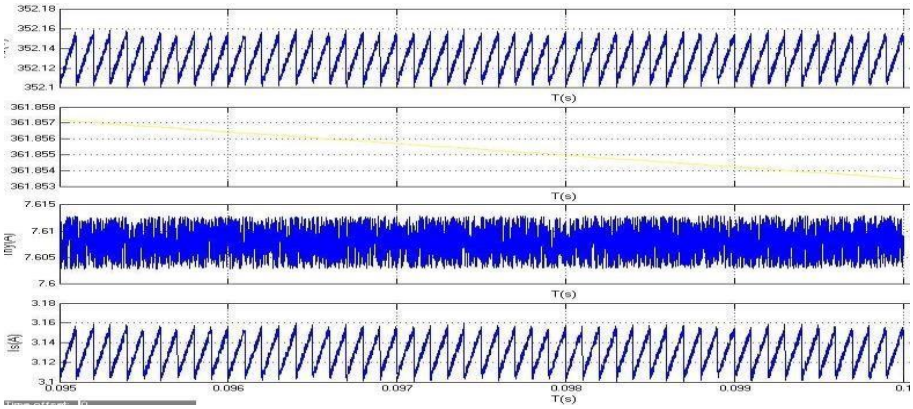

Figure. 22 PV Charging mode 6 is the step change from stage 1 to 2

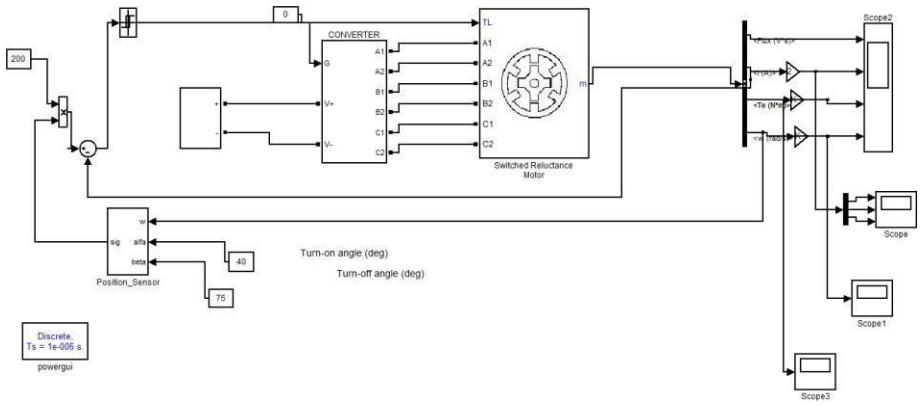

Figure 23. Simulation circuit of proposed system

19. Conclusion

Solar panels and SRMs are used in an EV driving system to ease range anxiety while reducing system costs. The following are some of the paper's most significant accomplishments:

I A tri-port converter is utilised to coordinate the PV panel, battery, and SRM. Six operating modes have been designed to enable flexible energy flow for driving control, driving/charging hybrid control, and charging control. An whole new grid-charging architecture is created without the usage of external power electronics equipment. (iv) A PV-fed battery charging control method is designed to enhance the efficiency of PV-fed battery charging.

Because PV-fed EVs are a more environmentally friendly and environmentally sound option than conventional internal combustion engines (ICEs), this study might help reduce the overall cost and CO2 emissions of electric cars. Additional uses include fuel cell-powered electric automobiles, which might benefit from the proposed system. Fuel cells are suitable for electric cars because of their high power density.

References

[1]. The IEEE Trans. on Industrial Electronics published an article by A. Emadi, L. Young-Joo and K. Rajashekara titled, "Power electronics and motor drives in electric, hybrid electric, and plug-in hybrid electric cars," in which the three authors discuss their findings.

IEEE Transactions on Industrial Electronics, 60, no. 7, July 2013, pp. 2638-2651, B. l K Bose

"Global energy situation and influence of power electronics in the 21st century."
It's been a long time since we've seen an all-electric car, so we've put together a comprehensive assessment of electric motor drivelines in commercial all-electric vehicles: [3].
Hybrid electric vehicle energy storage and management systems using power electronics-based solutions," IEEE Transactions on Industrial Electronics, vol.57, no.2, feb.2010, pp.608-616, Z. Amadi and S. Williamson [4].
Batteries for electric vehicles traction battery switch stations may be recharged with the help of a battery charger [5]. [6]. A. Kuperman and U. Levy, "Battery charger for electric vehicle traction battery switch station," IEEE Transactions on Industrial Electronics 60:12, December 2013.
It is possible to regulate the energy and battery capacity of a plug-in series hybrid electric car using fuzzy logic, according to a study published in IEEE Trans. Vehicle Technology 60, no. 8 (October 2011).
An improved charge equalisation for series-connected Li-Ion batteries in electric cars by employing a battery monitoring integrated circuit, IEEE Trans. Power Electron, May 2013, 28(8):3779-3787 [7].
Ping, Jing, Ranran, Tchengde, and Qian, "Magnetic properties research of an axial-axial flux compound-structure PMSM utilised for HEVs," IEEE Trans. Mag. 46(6): 21912194, June 2010.
Space-vector PWM control synthesis for an H-bridge drive in electric cars has been proposed by A. Kolli, A. De Bernardinis, E. Labouré, and G. Coquery in IEEE Trans. Veh. Tech., 62(6), pp. 2441-2452, 2013.
IEEE Trans. Ind. Electron., vol. 60, no. 11, pp. 4913-4919, Nov. 2013, S.M. Yang and J.Y. Chen, "Controlled dynamic braking for switching reluctance motor drives with a rectifier front end."